Supplemental Table 1: List of different referring phenotypes related with inherited cardiovascular diseases evaluated through next generation sequencing.

Referring phenotype	Number of studies
Hypertrophic cardiomyopathy	1078
Dilated cardiomyopathy	508
Arrhythmogenic cardiomyopathy	219
Ascending aortic disease/Marfan Syndrome	214
Long QT syndrome	188
Left ventricular non-compaction-hypertrabeculation	159
Brugada syndrome	135
Sudden death of unknown cause	131
Idiopathic ventricular fibrillation	52
Catecholaminergic Polymorphic Ventricular Tachycardia	49
Restrictive Cardiomyopathy	45
Noonan Syndrome/Cardiofaciocutaneous Syndrome	30
Cardiac Conduction Disease	19
Ehlers-Danlos Syndrome	16
Hereditary hemorrhagic telangiectasia/Primary pulmonary hypertension	16
Short QT syndrome	11
Familial Atrial Fibrillation	7
TOTAL	2877

Supplemental Table 2: List of 213 genes related to inherited cardiovascular diseases and sudden death included in our custom probe library.

Gene name	Codified protein
AARS2	Alanine--tRNA ligase, mitochondrial
ABCC9	ATP-binding cassette, sub-family C (CFTR/MRP), member 9
ACAD9	Acyl-CoA dehydrogenase family member 9, mitochondrial
ACADM	Medium-chain specific acyl-CoA dehydrogenase, mitochondrial
ACADVL	Very long-chain specific acyl-CoA dehydrogenase, mitochondrial
ACTA1	Actin, alfa 1, skeletal muscle
ACTA2	Actin, aortic smooth muscle
ACTC1	Actin, alpha cardiac muscle 1
ACTN2	Alpha-actinin-2
ACVRL1	Serine/threonine-protein kinase receptor R3
ADAMTSL4	ADAMTS-like protein 4
AGK	Acylglycerol kinase, mitochondrial
AGL	Glycogen debranching enzyme
AGPAT2	1-acyl-sn-glycerol-3-phosphate acyltransferase beta
AKAP9	A-kinase anchor protein 9
ALMS1	Alstrom syndrome protein 1
ANK2	Ankyrin 2
ANK3	Ankyrin-3
ANKRD1	Ankyrin repeat domain-containing protein 1
APOA5	Apolipoprotein A-V
APOB	Apolipoprotein B-100
APOC3	Apolipoprotein C-III
ATPAF2	ATP synthase mitochondrial F1 complex assembly factor 2
BAG3	BAG family molecular chaperone regulator 3
BMPR1B	Bone morphogenetic protein receptor type-1B
BMPR2	Bone morphogenetic protein receptor type II
BRAF	Serine/threonine-protein kinase B-raf
BSCL2	Seipin
CACNA1C	Voltage-dependent L-type calcium channel subunit alpha-1C
CACNA1D	Voltage-dependent L-type calcium channel subunit alpha-1D
CACNA2D1	Voltage-dependent calcium channel subunit alpha-2/delta-1
CACNB2	Voltage-dependent L-type calcium channel subunit beta-2
CALM1	Calmodulin
CALM2	Calmodulin
CALR3	Calreticulin 3
CAPN3	Calpain-3
CASQ2	Calsequestrin-2
CAV1	Caveolin-1
CAV3	Caveolin-3
CBL	E3 ubiquitin-protein ligase CBL
CBS	Cystathionine beta-synthase

CETP	Cholesteryl ester transfer protein
COL1A1	Collagen alpha-1(I) chain
COL1A2	Collagen alpha-2(I) chain
COL3A1	Collagen alpha-1(III) chain
COL5A1	Collagen alpha-1(V) chain
COL5A2	Collagen alpha-2(V) chain
COQ2	4-hydroxybenzoate polyprenyltransferase, mitochondrial
COX15	Cytochrome c oxidase assembly protein COX15 homolog
COX6B1	Cytochrome c oxidase subunit 6B1
CRELD1	Cysteine-rich with EGF-like domain protein 1
CRYAB	Alpha-crystallin B chain
CSRP3	Cysteine and glycine-rich protein 3
CTF1	Cardiotrophin 1
CTNNA3	Catenin alpha-3
DES	Desmin
DLD	Dihydrolipoyl dehydrogenase, mitochondrial
DMD	Dystrophin
DNAJC19	Mitochondrial import inner membrane translocase subunit TIM14
DOLK	Dolichol kinase
DSC2	Desmocollin 2
DSG2	Desmoglein 2
DSP	Desmoplakin
DTNA	Dystrobrevin alpha
ELN	Elastin
EMD	Emerin
ENG	Endoglin
EYA4	Eyes absent homolog 4
FAH	Fumarylacetoacetase
FBN1	Fibrillin 1
FBN2	Fibrillin 2
FHL1	Four and a half LIM domains protein 1
FHL2	Four and a half LIM domains 2
FHOD3	FH1/FH2 domain-containing protein 3
FKRP	Fukutin-related protein
FKTN	Fukutin
FLNA	Filamin-A
FLNC	Filamin-C
FOXD4	Forkhead box protein D4
GAA	Lysosomal alpha-glucosidase
GATA4	Transcription factor GATA-4
GATA6	Transcription factor GATA-6
GATAD1	GATA zinc finger domain-containing protein 1
GDF2	Growth/differentiation factor 2
GFM1	Elongation factor G, mitochondrial
GJA1	Gap junction alpha-1 protein

GJA5	Gap junction alpha-5 protein
GLA	Alpha-galactosidase A
GLB1	Beta-galactosidase
GNPTAB	N-acetylglucosamine-1-phosphotransferase subunits alpha/beta
GPD1L	Glycerol-3-phospate dehydrogenase 1-like protein
GUSB	Beta-glucuronidase
HCN4	Potassium/sodium hyperpolarization-activated cyclic nucleotide-gated channel 4
HFE	Hereditary hemochromatosis protein
HRAS	GTPase HRas
JAG1	Jagged-1
JPH2	Junctophilin 2
JUP	Junction plakoglobin
KCNA5	Potassium voltage-gated channel subfamily A member 5
KCND3	Potassium voltage-gated channel subfamily D member 3
KCNE1	Potassium voltage-gated channel subfamily E member 1
KCNE1L	Potassium voltage-gated channel subfamily E member 1-like protein
KCNE2	Potassium voltage-gated channel subfamily E member 2
KCNE3	Potassium voltage-gated channel subfamily E member 3
KCNH2	Potassium voltage-gated channel subfamily H member 2
KCNJ2	Inward rectifier potassium channel 2
KCNJ5	G protein-activated inward rectifier potassium channel 4
KCNJ8	ATP-sensitive inward rectifier potassium channel 8
KCNK3	Potassium channel subfamily K member 3
KCNQ1	Potassium voltage-gated channel subfamily KQT member 1
KLF10	Krueppel-like factor 10
KRAS	GTPase KRas
LAMA2	Laminin subunit alpha-2
LAMA4	Laminin subunit alpha-4
LAMP2	Lysosome-associated membrane glycoprotein 2
LDB3	LIM domain-binding protein 3
LDLR	Low density lipoprotein receptor
LIAS	Lipoyl synthase, mitochondrial
LMNA	Prelamin-A/C
LRP6	Low-density lipoprotein receptor-related protein 6
MAP2K1	Dual specificity mitogen-activated protein kinase kinase 1
MAP2K2	Dual specificity mitogen-activated protein kinase kinase 2
MIB1	E3 ubiquitin-protein ligase MIB1
MLYCD	Malonyl-CoA decarboxylase, mitochondrial
MRPL3	39S ribosomal protein L3, mitochondrial
MRPS22	28S ribosomal protein S22, mitochondrial
MTO1	Protein MTO1 homolog, mitochondrial
MURC	Muscle-related coiled-coil protein
MYBPC3	Myosin-binding protein C, cardiac-type
MYH11	Myosin-11
MYH6	Myosin-6

MYH7	Myosin-7
MYL2	Myosin regulatory light chain 2, ventricular/cardiac muscle isoform
MYL3	Myosin light chain 3
MYLK	Myosin light chain kinase, smooth muscle
MYLK2	Myosin light chain kinase 2, skeletal/cardiac muscle
MYOT	Myotilin
MYOZ2	Myozenin 2
MYPN	Myopalladin
NEBL	Nebulette
NEXN	Nexilin
NKX2-5	Homeobox protein Nkx-2.5
NOTCH1	Neurogenic locus notch homolog protein 1
NOTCH3	Neurogenic locus notch homolog protein 3
NPPA	Atrial natriuretic factor
NRAS	GTPase NRas
OBSL1	Obscurin-like protein 1
PCSK9	Proprotein convertase subtilisin/kexin type 9
PDHA1	Pyruvate dehydrogenase E1 component subunit alpha, somatic form, mitochondrial
PDLIM3	PDZ and LIM domain protein 3
PHKA1	Phosphorylase b kinase regulatory subunit alpha, skeletal muscle isoform
PITX2	Pituitary homeobox 2
PKP2	Plakophilin 2
PLN	Cardiac phospholamban
PLOD1	Procollagen-lysine,2-oxoglutarate 5-dioxygenase 1
PMM2	Phosphomannomutase 2
PRDM16	PR domain zinc finger protein 16
PRKAG2	5'-AMP-activated protein kinase subunit gamma-2
PRKG1	cGMP-dependent protein kinase 1
PSEN1	Presenilin-1
PSEN2	Presenilin 2
PTPN11	Tyrosine-protein phosphatase non-receptor type 11
RAF1	RAF proto-oncogene serine/threonine-protein kinase
RANGRF	Ran guanine nucleotide release factor
RBM20	Probable RNA-binding protein 20
RYR2	Ryanodine receptor 2
SCN10A	Sodium channel protein type 10 subunit alpha
SCN1B	Sodium channel subunit beta-1
SCN2B	Sodium channel subunit beta-2
SCN3B	Sodium channel subunit beta-3
SCN4B	Sodium channel subunit beta-4
SCN5A	Sodium channel protein type 5 subunit alpha
SGCA	Alpha-sarcoglycan
SGCB	Beta-sarcoglycan
SGCD	Delta-sarcoglycan
SHOC2	Leucine-rich repeat protein SHOC-2

SKI	Ski oncogene
SLC22A5	Solute carrier family 22 member 5
SLC25A4	ADP/ATP translocase 1
SLC2A10	Solute carrier family 2, facilitated glucose transporter member 10
SLMAP	Sarcolemmal membrane-associated protein
SMAD1	Mothers against decapentaplegic homolog 1
SMAD3	Mothers against decapentaplegic homolog 3
SMAD4	Mothers against decapentaplegic homolog 4
SMAD9	Mothers against decapentaplegic homolog 9
SNTA1	Alpha-1-syntrophin
SOS1	Son of sevenless homolog 1
SPRED1	Sprouty-related, EVH1 domain-containing protein 1
SURF1	Surfeit locus protein 1
TAZ	Tafazzin
TBX1	T-box transcription factor TBX1
TBX20	T-box transcription factor TBX20
TBX5	T-box transcription factor TBX5
TCAP	Telethonin
TGFB2	Transforming growth factor beta-2
TGFB3	Transforming growth factor, beta 3
TGFBR1	TGF-beta receptor type-1
TGFBR2	TGF-beta receptor type-2
TMEM43	Transmembrane protein 43
TMEM70	Transmembrane protein 70, mitochondrial
TMPO	Thymopoietin
TNNC1	Troponin C, slow skeletal and cardiac muscles
TNNI3	Troponin I, cardiac muscle
TNNT2	Troponin T, cardiac muscle
TPM1	Tropomyosin alpha-1 chain
TRDN	Triadin
TRIM63	E3 ubiquitin-protein ligase TRIM63
TRPM4	Transient receptor potential cation channel subfamily M member 4
TSFM	Elongation factor Ts, mitochondria
TTN	Titin
TTR	Transthyretin
TXNRD2	Thioredoxin reductase 2, mitochondrial
VCL	Vinculin

Supplemental Table 3. List of mutations identified in the *FLNC* gene with their predicted functional effect on the protein and their frequency in different public databases.

Exon/ Intron	Chr DNA level name	c.DNA	Protein	Predicted functional effect	1KG	EVS	ExAC	Previously reported
Ex1	Chr7:128470932delC	c.241delC	p.Arg81Alafs*15	Introduces a premature stop codon at amino acid 95, after 14 novel residues. Truncation in the CH1 domain at the ABD.	-	-	-	-
Ex1	Chr7:128470940C>G	c.249C>G	p.Tyr83*	Truncation in the CH1 domain at the ABD.	-	-	-	-
Ex2	Chr7:128475608_128475626delTGGTGGACAACTGCGCCCC	c.581_599delTGGTGGACAACTGCGCCCC	p.Leu194Profs*52	Truncation in the CH2 domain at the ABD.	-	-	-	-
Ex3-6	Chr7:128476498_128478081delinsTGCCCCGGGAGGGGTGCCTCAGTCTCCCTGTCCCTCTG	c.602-716_1010delinsTGCCCCGGGAGGGGTGCCTCAGTCTCCCTGTCCCTCTG	p.Gly201Valfs*36	Complete deletion of exons 3, 4, 5, and part of 6. Truncation in the CH2 domain. Eliminates the splicing acceptor of exon 3. Possible skipping of exon 3 with a loss of amino acids 201-233 (CH2 domain at the ABD), frame shift at this point, addition of 3 new amino acids, and stop codon at position (c.711). Implies the loss of the last 2524 amino acids.	-	-	-	-
Ex11	Chr7:128480925C>T	c.1714C>T	p.Gln572*	Truncation in the Ig-repeat 4.	-	-	-	-
Ex14	Chr7:128482371delT	c.2208delT	p.Lys737Serfs*11	Truncation in the Ig-repeat 5.	-	-	-	-
Ex19	Chr7: 128483926delC	c.2888delC	p.Pro963Argfs*26	Truncation in the Ig-repeat 8.	-	-	1/120492	-
Ex21	Chr7:128484921_128484922dupGCGAGTACACCATCAACATCCTG	c.3402_3403dupGCGAGTACACCATCAACATCCTG	p.Phe1135Alafs*62	Truncation in the Ig-repeat 10.	-	-	-	-
Int21	Chr7:128486043G>A	c.3791-1G>A	-	Eliminates the splicing acceptor of exon 22. Possible skipping of exon 22 with a loss of amino acids 1265-1322 (Ig-repeat 11).	-	-	-	-
Int21	Chr7:128486043G>C	c.3791-1G>C (2)	-	Eliminates the splicing acceptor of exon 22. Possible skipping of exon 22 with a loss of amino acids 1265-1322 (Ig-repeat 11).	-	-	1/118498	Two cases with dilated cardiomyopathy (1,2)
Int22	Chr7:128486353A>T	c.3965-2A>T (2)	-	Eliminates the splicing acceptor of exon 23. Possible skipping of exon 23 with a loss of amino acids 1322-1376) (Ig-repeat 11-12), frame shift at this point, addition of 8 new amino acids, and stop codon at position 1330 (c.4154). Implies the loss of the last 1403 amino acids.	-	-	-	-
Ex23	Chr7:128486496_128486497dupA	c.4106_4107dupA	p.Asn1369Lysfs*36	Truncation in the Ig-repeat 12.	-	-	-	-
Int23	Chr7:128486518delG	c.4127+1delG (2)	-	Abolishes the splicing donor of exon 23. Two alternatives: 1) A possible loss of amino acid 1376 (Ig-repeat 12), frame shift at this point, addition of 6 new amino acids, and stop codon at position (c.4127+18). Implies the loss of the last 1350 amino acids.	-	-	-	-

				2) Possible skipping of exon 23 (Ig-repeat 12), frame shift at this point, addition of 9 new amino acids, and stop codon at position 1386 (c.4154). Implies the loss of the last 1401 amino acids.				
Int26	Chr7:128488123G>T	c.4580+1G>T	-	Eliminates the splicing donor of exon 26. Possible skipping of exon 26 with a loss of amino acids 1486-1527 (Ig-repeat 13), frame shift at this point, addition of 80 new amino acids, and stop codon at position 1566 (c.4817). Implies the loss of the last 1239 amino acids.	-	-	-	-
Int28	Chr7:128489037delG	c.4927+1delG	-	Abolishes the splicing donor of exon 28. Two alternatives: 1) A possible loss of amino acid 1643 (Ig-repeat 15), frame shift at this point, addition of 53 new amino acids, and stop codon at position (c.4928-38). Implies the loss of the last 1083 amino acids. 2) Possible skipping of exon 28, (Ig-repeat 15), frame shift at this point, addition of 22 new amino acids, and stop codon at position 1665 (c.4994). Implies the loss of the last 1145 amino acids.	-	-	-	-
Ex32	Chr7:128490537G>T	c.5398G>T (2)	p.Gly1800*	Truncation in the Ig-repeat 16.	-	-	-	-
Int33	Chr7:128490998G>C	c.5539+1G>C	-	Abolishes the splicing donor of exon 33. Possible skipping of exon 33 with a loss of amino acids 1800-1846 (Ig-repeat 16).	-	-	-	-
Ex37	Chr7:128493085G>A	c.6208G>A	p.Gly2070Ser	The splicing is likely to be altered (as predicted by 3 software tools) but the consequences are not predictable.	-	-	-	-
Ex38	Chr7:128493545delT	c.6231delT	p.Ser2077Argfs*50	Truncation in the Ig-repeat 19.	-	-	-	-
Ex38	Chr7:128493554_128493573delCCCAAGCAAGGTGGACATCA	c.6240_6259delCCCAAGCAAGGTGGACATCA	p.Pro2081Leufs*2	Truncation in the Ig-repeat 19.				-
Ex41	Chr7:128494715C>T	c.6976C>T (2)	p.Arg2326*	Truncation in the Ig-repeat 21.	-	-	1/111082	-
Int43	Chr7:128495369G>A	c.7251+1G>A	-	Abolishes the splicing donor of exon 43. Possible skipping of exon 43 (Ig-repeat 21 and 22), frame shift at this point, addition of 23 new amino acids, and stop codon at position 2440 (c.7320). Implies the loss of the last 346 amino acids.	-	-	-	Two families with dilated cardiomyopathy (3)
Ex48	Chr7:128498506delG	c.8107delG	p.Asp2703Thrfs*69	Replacement of 23 amino acids at the C-terminal tail (dimerization domain) and extension of 45 amino acids.	-	-	-	-

ABD= actin binding domain. Ig-repeat= immunoglobulin-like repeat. CH1= calponin homology domain 1. CH2= calponin homology domain 2. (2)= mutations identified in two unrelated families. Reference sequence for names at chromosomal DNA level: NC_000007.13; cDNA level: NM_001458.4; protein level: NP_001449.3. 1KG= 1000 Genomes Project. EVS= Exome Variant Server. ExAC= Exome Aggregation Consortium. Frequency is expressed Nº of alternative alleles/Total Nº of alleles.

Supplemental Table 4: Detailed clinical information on *FLNC* mutation carriers.

Family	Ind	Mutation	Age Dx	Age LFU	Sex	FH SD	Clinical press	SM	Pheno	LV DD	LV EF	MWT	RV affect	CK	Rhythm	CCD	Low Volt	Neg Tw	Ter QRS>55	Vent arrhyt	EPS	LGE on MRI	LV NC	Pathology	Events	Age at event	ICD	Comments
25767	III:1	Ser2077Argfs*50	48	52	M	+	D	-	DCM	83	27	normal	+	N	S	LBBB	-	n/a	n/a	n/a	n/a	n/a	-	No fibrosis; myocyte degeneration; RV linphocytic infiltration	HTx	52		
25767	III:2	Ser2077Argfs*50	59	59	M		P, AF	-	DCM	67	35	10	-	n/a	S	-	-	V4-V6	+	n/a	n/a	n/a	-	n/a	n			
25767	IV:1	Ser2077Argfs*50		33	F		n	-	Healthy	42	65	9	-	n/a	S	-	-	-	-	n/a	n/a	n/a	-	n/a	n			
25767	IV:3	Ser2077Argfs*50		30	F		n	-	Healthy	44	65	6	-	n/a	S	-	-	-	-	n/a	n/a	n/a	-	n/a	n			
26958	II:1	Tyr83*	17	17	M	+	SD	-	LDACM	n/a	n/a	normal	-	n/a	n/a	n/a	n/a	n/a	n/a	n/a	n/a	n/a	-	LV subepicardial fibrosis	SD	17		SD after a soccer match.
26958	I:1	Tyr83*	49	49	M		n	-	Affected?	53	60	12	+	n/a	S	-	-	-	-	-	n/a	n	-	n/a	n			Mild dyskinetic zone/saculation on anterior RV wall on cardiac-MRI.
27103	III:1	c.3791-1G>C	45	52	F	+	n	-	DCM	58	35	8	-	n/a	S	-	-	-	-	FVE, NSVT, SVT	n/a	n/a	-	n/a	aICDs	52	2º	SVT on effort on routine effort test. ICD discharge: VT on exercise. Positive delay potencials on SAECG.
27103	IV:1	c.3791-1G>C		26	M		n	-	Healthy	normal	normal	normal	-	n/a	S	-	-	-	-	-	n/a	n	-	n/a	n			Normal SAECG.

27348	II:3	Asn1369Lysfs*36	20	60	M	+	SVT	-	DCM	82	32	13	+	N	AF	-	+	V4-V6	+	SVT	n/a	n/a	-	LV endomyocardial fibroelastosis	aICDs; HTx	21; 60	2º	SVT requiring shocks (20,21,34 yo). Urgent HTx; severe RV systolic dysfunction.
27348	III:2	Asn1369Lysfs*36	34	38	F		FVE	-	Affected?	45	64	10	-	n/a	S	-	-	-	-	FVE	n/a	n/a	-	n/a	n			
29544	III:2	Pro963Argfs*26	0.25	1	F	-	D	-	DCM	40	22	normal	-	N	S	-	-	-	-	n/a	n/a	n/a	-	LV myocardial fibrosis and endomyocardial fibroelastosis	HTx	1		
29544	II:1	Pro963Argfs*26	40	40	F		n	-	Affected?	dilated	47	10	-	n/a	S	-	+	-	-	-	n/a	n	+	n/a	n			Mild LV dilatation and systolic dysfunction.
29544	III:1	Pro963Argfs*26	9	9	F		n	-	Affected?	46	69	6	-	n/a	S	-	-	-	-	n/a	n/a	n/a	+	n/a	n			Bicuspid aortic valve with mild insufficiency.
29876	III:3	c.4127+1delG	19	25	M	+	S, P	-	LDACM	61	54	11	-	N	S	-	-	-	-	FVE, SVT	n/a	LV (subepicardial)	+	LV fibrosis	aICDs; SD	25	2º	SVT playing football, ICD implant, death on electric storm. Palmoplantar keratosis.
29876	II:5	c.4127+1delG	43	57	M		S, P	-	DCM	60	50	12	-	N	S	-	-	-	-	SVT	SVT	n/a	-	n/a	aICDs	51	2º	Syncope playing football secondary to SVT. Several ICD interventions due to SVT. Palmoplantar keratosis.
29876	II:3	c.4127+1delG	60	60	F		n	-	LDACM	51	67	12	-	n/a	S	-	-	-	-	FVE	n/a	LV (intramyocardial)	-	n/a	n			

29876	II:4	c.4127+1delG	35	59	M		D, S	-	DCM	64	43	11	-	n/a	AF	LAFB	-	-	-	FVE, NSVT	n/a	n	-	n/a	n			Palmoplantar keratosis.
29876	II:7	c.4127+1delG	54	56	M		n	-	LDACM	normal	mild	normal	-	n/a	S	-	-	n/a	n/a	FVE, NSVT	n/a	LV (subepicardial)	-	n/a	n			Palmoplantar keratosis.
29876	III:5	c.4127+1delG	21	21	M		n	-	LDACM	51	52	10	-	n/a	S	-	-	-	-	-	n/a	LV (intramyocardial)	-	n/a	n			
31035	IV:1	c.7251+1G>A	26	33	F	+	NSVT	-	DCM	66	23	6	-	N	S	-	+	V3-V6	+	NSVT	-	n/a	-	n/a	n		1º	
31035	III:2	c.7251+1G>A	38	61	F		n	-	DCM	64	33	10	-	n/a	S	-	+	V1-V5	+	n/a	n/a	n/a	-	n/a	n		1º	
31035	IV:4	c.7251+1G>A		39	F		n	-	Healthy	52	68	6	-	n/a	S	-	-	-	-	-	n/a	n	-	n/a	n			
31035	III:5	c.7251+1G>A	58	63	F		n	-	DCM	66	35	8	-	n/a	S	-	-	V1-V6	+	FVE	n/a	n/a	-	n/a	n		1º	
31035	IV:6	c.7251+1G>A	39	39	F		n	-	Affected?	46	54	8	-	n/a	S	-	-	-	-	-	n/a	n/a	-	n/a	n			
31035	IV:7	c.7251+1G>A	40	40	F		SD	n/a	LDACM	n/a	n/a	normal	-	n/a	n/a	n/a	n/a	n/a	n/a	n/a	n/a	n/a	-	LV concentric subepicardial fibrosis	SD	40		
31277	II:2	c.4927+1 delG	29	55	F	-	D	+	RCM	32	66	14	-	Mild	AF	1ºAVB	-	V5-V6	-	n/a	n/a	n/a	-	RV fibrosis (endomyocardial biopsy)	HTx	45		
32406	III:2	Gln572*	20	22	M	+	P	-	LDACM	68	37	normal	+	n/a	S	-	+	V5-V6	-	FVE	n/a	LV (subepicardial and intramyocardial)	-	LV concentric subepicardial fibrosis	SD	22	1º (ind)	SD playing football (waiting ICD implant).
33319	II:1	c.4127+1delG	53	63	M	-	D	-	DCM	dilated	15	n/a	+	N	AF	-	n/a	n/a	n/a	n/a	n/a	LV (transmural)	n/a	n/a	n			
33319	III:2	c.4127+1delG	30	31	M		CP	-	LDACM	normal	57	normal	-	mild	S	-	-	-	-	n/a	n/a	LV (intramyocardial)	n/a	n/a	n			
33319	III:1	c.4127+1delG		32	F		n	n/a	n/a	n/a	n/a	n/a	n/a	n/a	n/a	n/a	n/a	n/a	n/a	n/a	n/a	n/a	n/a	n/a	n			
33541	II:3	c.5539+1G>C	60	68	M	+	D, CP, FVE	-	DCM	60	40	11	-	N	AF	LAFB	-	Inf, V4-V6	-	FVE, NSVT	n/a	LV (subepicardial and intramyocardial)	-	n/a	n		1º	
33541	II:5	c.5539+1G>C	55	63	M		SD	-	DCM	dilated	45	11	-	N	S	-	+	-	-	SVT	n/a	LV (subepicardial and intramyocardial)	-	n/a	SD; aICDs	55	2º	Multiple appropriate ICD shocks due to SVT/VF.

33541	II:6	c.5539+1G>C	59	60	F		S, D, P	-	Affected?	50	55	9	-	N	S	-	-	-	-	FVE	n/a	LV (intramyocardial)	-	n/a	n			
33541	III:1	c.5539+1G>C		39	F		n	-	Healthy	38	60	8	-	N	S	-	-	-	-	-	n/a	n	-	n/a	n			
33675	II:1	Gly1800*	55	59	M	-	P	-	LDACM	59	45	9	+	X2	S	-	-	V3-V6	-	FVE, NSVT	n/a	LV (subepicardial)	+	n/a	n		1º	Positive delay potencials on SAECG.
33675	II:2	Gly1800*	60	63	M		n	-	Affected?	37	67	14	-	N	S	-	-	-	-	n/a	n/a	n	+	n/a	n			HTN.
36107	II:9	Arg2326*	54	59	F	+	D	-	DCM	dilated	20	normal	+	N	S	LBBB	+	n/a	n/a	FVE, NSVT	n/a	LV (subepicardial)	-	n/a	HTx	57		Emergent HTx.
36107	II:4	Arg2326* (o)	52	58	F		D	n/a	DCM	dilated	25	normal	-	n/a	S	-	+	V1-V4	-	NSVT	n/a	LV basal septum	-	n/a	SD	58		Listed for HTx prior to SD.
36107	II:6	Arg2326*	57	59	F		S, P	-	Affected?	54	56	8	-	N	S	-	+	Inf, V1-V6	+	FVE	-	n	-	n/a	n			
36107	III:7	Arg2326*		33	M		n	-	Healthy	54	60	8	-	N	S	-	-	-	-	n/a	n/a	n	-	n/a	n			
36107	III:2	Arg2326*	33	34	M		S, P	-	DCM	60	46	11	+	N	S	-	-	-	+	FVE	n/a	LV (subepicardial)	-	n/a	aICDs	33	1º	Multiple SVT treated by the ICD.
36107	III:3	Arg2326*	33	38	F		D	-	DCM	57	35	12	-	N	S	-	-	-	-	FVE, NSVT	n/a	LV (intramyocardic)	-	n/a	n		1º (ind)	Declined ICD.
36203	III:1	Gly1800*	38	43	M	+	P	-	LDACM	dilated	50	10	-	n/a	S	-	-	Inf, V6	-	FVE, NSVT	n/a	LV (subepicardial and intramyocardial)	-	n/a	n		1º	Abnormal Q wave DIII and aVF.
36203	III:3	Gly1800*	28	38	M		P	-	LDACM	54	51	11	-	n/a	n/a	n/a	n/a	n/a	n/a	n/a	n/a	n/a	-	LV fibrosis posterior wall	SD	38		
36203	II:1	Gly1800*	71	74	M		S, CP	-	LDACM	46	41	11	-	N	S	-	-	Inf	n/a	FVE	n/a	LV (subepicardial and intramyocardial)	-	n/a	n		1º	Abnormal Q wave in DIII.
36203	IV:2	Gly1800*		6	F		n	-	Healthy	28	70	6	-	n/a	S	-	-	V1-V3 (6 years)	-	n/a	n/a	n/a	-	n/a	n			
37286	IV:2	Asp2703Thrfs*69	24	24	F	+	Stroke	-	DCM	63	26	7	-	N	S	-	+	Inf, V1-V3	-	NSVT	n/a	n	+	n/a	Stroke	24		

37286	III:1	Asp2703Thrfs*69	43	59	M		S	-	DCM	70	40	7	n/a	N	AF	-	-	Inf	-	SVT	-	n/a	n/a	n/a	aICDs	51	1º	2 ICD shocks on VF.
37296	II:2	Arg2326*	34	43	F	+	D	-	DCM	70	35	11	-	N	PM	-	+	Inf, V3-V6	n/a	FVE, NSVT	VF	n/a	-	n/a	aICDs	38	1º	Heart failure during pregnancy. Diastolic restrictive filling pattern. VF induction on EPS. 3 appropriate ICD shocks due to SVT (38, 39, 40 yo) and 1 due to VF (38 yo).
37302	I:1	Gly2070Ser	50	68	M	+	D	-	DCM	78	21	normal	+	n/a	S	1ºAVB	-	n/a	n/a	NSVT	n/a	n/a	-	n/a	SD	68		Heart failure at presentation; sudden death in worsening heart failure
37302	II:1	Gly2070Ser	24	34	M		n/a	n/a	Affected?	n/a	normal	normal	n/a	n/a	n/a	n/a	n/a	n/a	n/a	n/a	n/a	n/a	n/a	n/a	n			Perimyocarditis .
37302	II:2	Gly2070Ser	24	32	M		n/a	n/a	Affected?	n/a	normal	normal	n/a	n/a	n/a	n/a	n/a	n/a	n/a	n/a	n/a	n/a	n/a	n/a	n			Perimyocarditis.
41721	II:2	c.3791-1G>A	42	61	F	+	P	-	DCM	56	43	9	-	N	S	LAFB+ RBBB	-	-	-	-	n/a	n	-	n/a	n			
41721	II:4	c.3791-1G>A	44	52	M		n	-	DCM	65	45	10	-	N	S	-	-	-	-	NSVT	-	n	-	n/a	n			NSVT during effort test.
41721	II:7	c.3791-1G>A (o)			F		n/a	n/a	DCM	n/a	n/a	n/a	n/a	n/a	n/a	n/a	n/a	n/a	n/a	n/a	n/a	n/a	n/a	n/a	SD	?		
41721	III:1	c.3791-1G>A	20	34	M		n	-	DCM	64	49	10	-	N	S	-	-	-	-	FVE, NSVT	n/a	n/a	-	n/a	n			Positive delay potencials on SAECG.
41721	III:5	c.3791-1G>A	27	33	M		n	-	DCM	57	34	11	-	N	S	-	+	V3-V6	-	FVE, NSVT	n/a	n	-	n/a	SD	33		
47263	III:2	Phe1135Alafs*62	53	55	F	+	n	-	DCM	56	20	12	-	N	S	-	-	-	-	FVE, NSVT	n/a	n/a	-	n/a	n		1º	CRT-D
47253	IV:3	Phe1135Alafs*62		24	M		n	-	Healthy	54	68	8	-	n/a	S	-	-	-	-	n/a	n/a	n/a	-	n/a	n			
47263	IV:1	Phe1135Alafs*62		30	F		n	-	Healthy	50	73	9	-	n/a	S	-	-	-	-	n/a	n/a	n/a	-	n/a	n			

47263	IV:2	Phe1135Alafs*62	28	29	M		n	-	Affected?	60	53	11	-	n/a	S	-	-	-	+	n/a	n/a	n	-	n/a	n			Abnormal Q wave DIII.
48028	III:1	Lys737Serfs*11	58	62	F	+	D, FVE, NSVT	-	DCM	49	35	9	-	N	S	-	-	-	+	FVE, NSVT	n/a	LV (intramyocardial)	-	n/a	n			
48028	III:2	Lys737Serfs*11	44	60	F		D, P	-	DCM	57	40	8	+	n/a	S	-	-	-	+	FVE, NSVT	n/a	n/a	-	RV fibrosis (endomyocardial biopsy)	n			
48028	IV:1	Lys737Serfs*11		31	F		n	-	Healthy	46	60	7	-	n/a	S	-	-	-	-	n/a	n/a	n/a	-	n/a	n			
48102	II:1	c.3791-1G>C	44	50	M	+	S	-	DCM?	52	50	11	-	n/a	S	-	+	Inf	-	NSVT	n/a	n/a	-	n/a	SD	44	2º	NSVT on effort test and posterior akinesis on echo before an abborted SD.
48102	II:2	c.3791-1G>C	48	48	F		FVE	-	Affected?	normal	57	normal	+	n/a	S	-	+	-	-	FVE	NSVT	n	-	n/a	n			Mild regional RV anterior wall hypokinesis with normal RV size.
48102	I:1	c.3791-1G>C		78	M		n	-	Unknown	n/a	n/a	n/a	n/a	n/a	n/a	n/a	n/a	n/a	n/a	n/a	n/a	n/a	n/a	n/a	n			CABG. Known to have "arrhythmias" (reported as extrasystoles) after surgery, treated with sotalol.
48924	IV:4	p.Leu194Profs*52	21	21	M	+	P	-	DCM	60	38	8	-	N	S	-	-	Inf, V4-V6	-	FVE, NSVT	n/a	n	-	n/a	n		1º	
48924	III:2	p.Leu194Profs*52	60	60	M		SD	-	DCM	n/a	n/a	n/a	+	n/a	S	-	+	-	-	n/a	n/a	n/a	-	Bi-ventricular dilatation (fibrosis not evaluated)	SD	60		
48924	III:1	p.Leu194Profs*52	51	51	F		n	-	Affected?	51	49	10	-	N	S	-	-	-	-	-	n/a	n	-	n/a	n			
48924	IV:1	p.Leu194Profs*52		18	M		n	-	Healthy	49	60	10	-	n/a	S	-	-	-	-	-	n/a	n	-	n/a	n			Myocarditis aged 13.
49537	I:1	c.3965-2A>T	55	66	M	-	D, CP, SVT	-	DCM	81	15	8	+	N	S	LBBB	-	n/a	n/a	FVE, NSVT, SVT	n/a	n/a	-	n/a	aICDs	62	2º	

49537	II:1	c.3965-2A>T	36	41	M		P, SVT	-	DCM	52	42	11	-	n/a	S	-	-	-	-	SVT	n/a	n/a	-	n/a	n		2º	
49537	III:3	c.3965-2A>T	34	38	M		P	-	DCM	61	45	10	-	N	S	-	-	-	-	FVE	n/a	LV (intramyocardial)	+	n/a	n		1º	
48888	IV:1	Pro2081Leufs*2	33	34	M	+	n	-	DCM	66	40	11	-	n/a	S	-	-	-	-	FVE, NSVT	n/a	LV (subepicardial and intramyocardial)	-	n/a	n		1º	
48888	IV:2	Pro2081Leufs*2	36	36	M		n	-	DCM	58	56	9	-	n/a	S	-	-	-	-	FVE	n/a	LV (subepicardial and intramyocardial)	-	n/a	n			Positive delay potencials on SAECG.
48956		c.4580+1G>T	53	75	M	-	S, CP, SVT	-	LDACM	49	47	14	-	N	S	-	+	V4-V6	+	FVE, NSVT, SVT	n/a	LV (transmural)	-	n/a	n		2º	
48868		Gly201Valfs*36	47	48	M	+	D, CP, NSVT	-	DCM	71	36	11	+	N	S	LBBB	n/a	n/a	n/a	FVE, NSVT	n/a	n	-	n/a	Stroke	47		ECG not informative due to LBBB.
49818		c.3965-2A>T	62	64	M	+	D	-	DCM	54	18	13	+	N	S	-	+	Inf	+	FVE, NSVT, SVT	n/a	n/a	-	n/a	n			LVEF recovered to 40% after medical treatment.
51118	II:1	Arg81Alafs*15	48	49	F	-	S	-	LDACM	57	40	8	-	N	S	-	-	-	-	NSVT	NSVT	LV (subepicardial and intramyocardial)	-	n/a	n		1º	
51118	II:2	Arg81Alafs*15	48	49	F		CP	-	LDACM	52	45	10	-	N	S	-	+	Inf, V4-V6, DI, aVL	-	FVE, NSVT	n/a	LV (subepicardial and intramyocardial)	-	n/a	n			
51118	I:2	Arg81Alafs*15		72	F		n	-	Healthy	48	60	10	-	N	S	-	-	-	-	n/a	n/a	n/a	-	n/a	n			

Grey shaded files indicate probands. Fam= familiy number. Ind= individual identification according to position in the pedigree. (o)= obligate carrier of the mutation. Age Dx= age at diagnosis. Age LFU= age at last follow-up. M= male; F= female. FHSD= family history of sudden death. Clinical press= signs or symptoms at clinical presentation (D= dyspnea; S= syncope; P= palpitations; AF= atrial fibrillation; NSVT= non-sustained ventricular tachycardia SVT= sustained ventricular tachycardia; FVE= frequent ventricular ectopics; SD= sudden death; CP= chest pain). SM= presence of clinical signs of skeletal myopathy. Pheno= phenotype (DCM= dilated cardiomyopathy; LDAC= left-dominant arrhythmogenic cardiomyopathy; RCM= restrictive cardiomyopathy; affected?= individual possibly affected but not fulfilling diagnosis of a specific cardiomyopathy). LVDD= left ventricular diastole diameter. LVEF= left ventricular ejection fraction (mild= mild depression). MLVWT= maximal left ventricular wall

thickness. RV affect= right ventricular affection (akinesia, dyskinesia, aneurysm, dilatation, systolic dysfunction). CK= plasma levels of creatine-kinase (N= normal value; mild= mild elevation). Rhythm= cardiac rhythm (S= sinus rhythm; AF= atrial fibrillation; PM= pace-maker). CCD= cardiac conduction defects (1ºAVB= first-degree AV block; LBBB= left bundle branch block; RBBB= right bundle branch block; LAFB= left anterior fascicular block). Low volt= low QRS voltage amplitude on limb leads. Neg Tw= ECG leads with abnormal negative T waves (inf= DII, DIII, aVF). Vent arrhyt= evidence of ventricular arrhythmias (SVT= sustained ventricular tachycardia; NSVT= non-sustained ventricular tachycardia; FVE= frequent ventricular ectopics). EPS= result of electrical endocavitary stimulation. LGE on MRI= presence and localization of late gadolinium enhancement on cardiac magnetic resonance images. LVNC= signs of myocardial non-compaction of the left ventricular wall (not necessarily fulfilling diagnosis of left ventricular non-compaction cardiomyopathy). Pathology= findings in the pathological evaluation of cardiac necropsy/explanted heart/endomyocardial biopsy. Events= cardiovascular events (SD= sudden death; HTx= heart transplant; aICDs= appropriate ICD shock. ICD= implantable cardiac defibrillator indication (1º= primary prevention; 2º= secondary prevention; ind= indicated but not implanted. + = positive finding. - = negative finding. n/a= not available data. LV= left ventricle. RV= right ventricle. VF= ventricular fibrillation. SAECG= signal average ECG. CRT-D= cardiac resynchronization therapy pacemaker with defibrillation therapy. CABG= coronary artery by-pass graft.

Supplemental Table 5: Logarithm (base ten) of odds (LOD) scores showing cosegregation of truncating mutations in FLNC with the cardiac phenotype in individual families and combined.

Family ID	Mutation	LOD-score (penetrance 99%)
51118	Arg81Alafs*15	0.1758
26958	Tyr83*	0
48924	p.Leu194Profs*52	0.0786
48868	Gly201Valfs*36	n/a
32406	Gln572*	0.095
48028	Lys737Serfs*11	0.0783
29544	Pro963Argfs*26	0.5977
47263	Phe1135Alafs*62	0.0787
41721	c.3791-1G>A	0.3268
27103	c.3791-1G>C	0
48102	c.3791-1G>C	0.2984
49537	c.3965-2A>T	0.3942
49818	c.3965-2A>T	n/a
27348	Asn1369Lysfs*36	0.6364
29876	c.4127+1delG	1.6253
33319	c.4127+1delG	0.9117
48956	c.4580+1G>T	n/a
31277	c.4927+1 delG	n/a
33675	Gly1800*	0.2981
36203	Gly1800*	0.1753
33541	c.5539+1G>C	0.8491
37302	Gly2070Ser	0
25767	Ser2077Argfs*50	0.0789
48888	Pro2081Leufs*2	0.0781
36107	Arg2326*	1.3955
37296	Arg2326*	n/a
31035	c.7251+1G>A	1.3671
37286	Asp2703Thrfs*69	0
	Total	**9.539**

LOD score for each family calculated by means of Superlink-Online SNP tool with the following settings: disease mutant gene frequency= 0.001, dominant mode of inheritance, penetrance= 99%, θ=0. Individuals ≤40 years without clear clinical affection were consider “unknown phenotype”. n/a= not available family information.

Supplemental Appendix references

1. Golbus JR, Puckelwartz MJ, Dellefave-Castillo L, et al. Targeted analysis of whole genome sequence data to diagnose genetic cardiomyopathy. Circ Cardiovasc Genet 2014;7:751–9.
2. Deo RC, Musso G, Tasan M, et al. Prioritizing causal disease genes using unbiased genomic features. Genome Biol 2014;15:3274.
3. Begay RL, Tharp CA, Martin A, et al. FLNC Gene Splice Mutations Cause Dilated Cardiomyopathy. J Am Coll Cardiol Basic Trans Science 2016. DOI: 10.1016/j.jacbts.2016.05.004.

Supplemental Figure 1: Pedigrees of families with truncating mutations in *FLNC*.

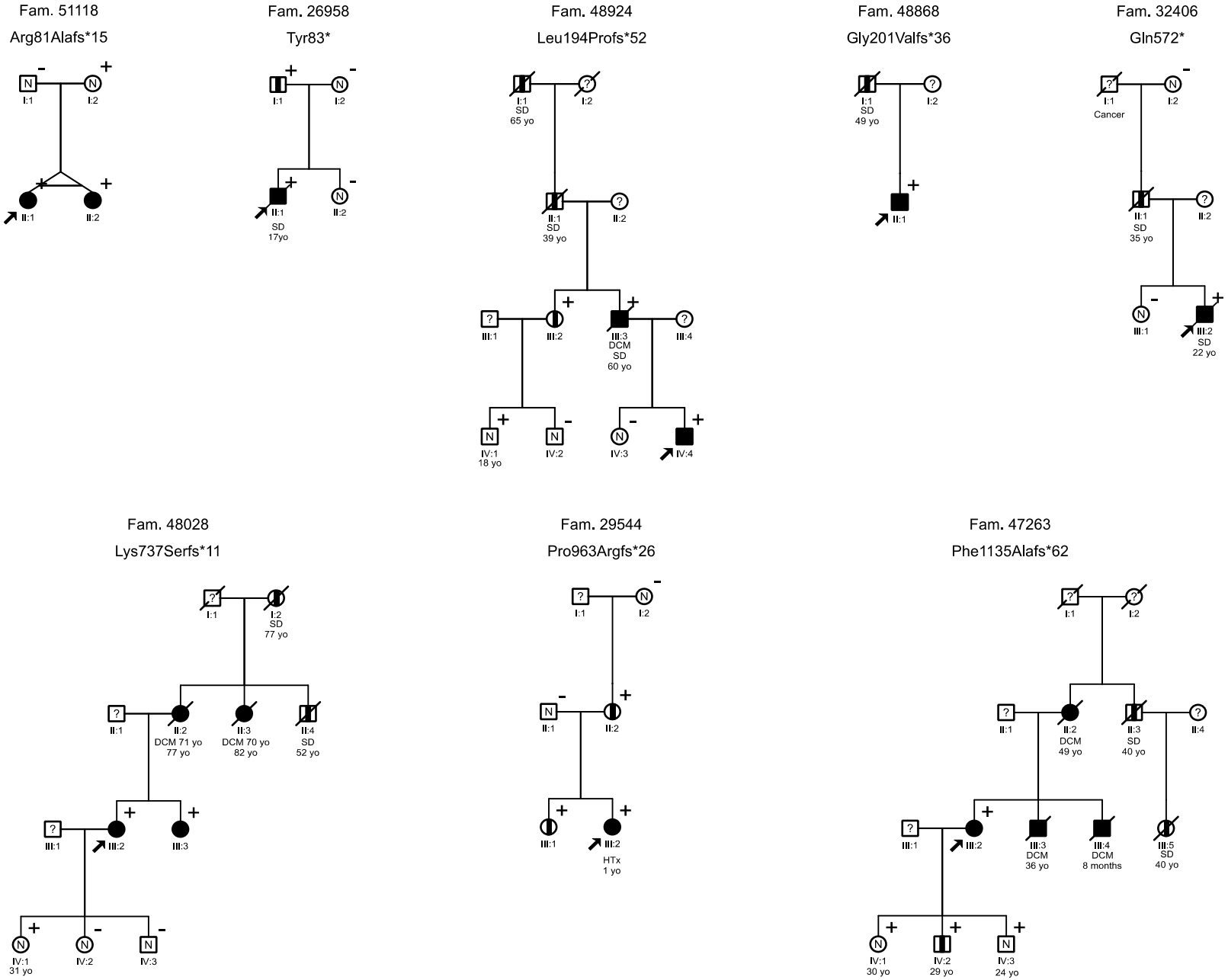

Fam. 41721

c.3791-1G>A

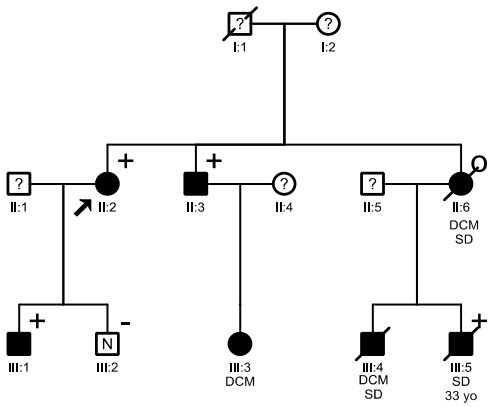

Fam. 27103

c.3791-1G>C

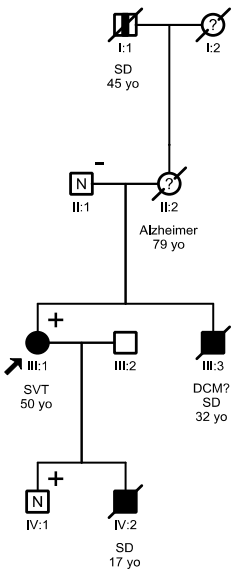

Fam. 48102

c.3791-1G>C

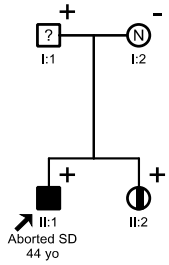

Fam. 49818

c.3965-2A>T

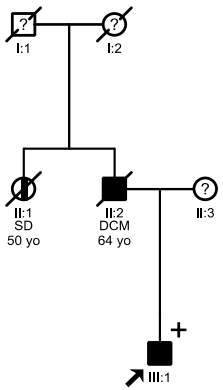

Fam. 49537

c.3965-2A>T

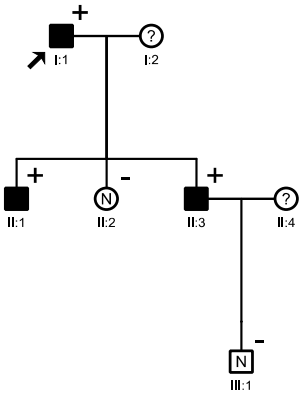

Fam. 27348

Asn1369Lysfs*36

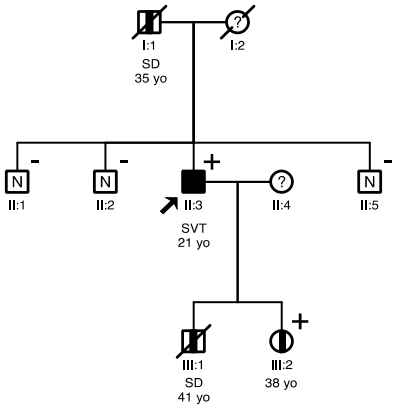

Fam. 33319

c.4127+1delG

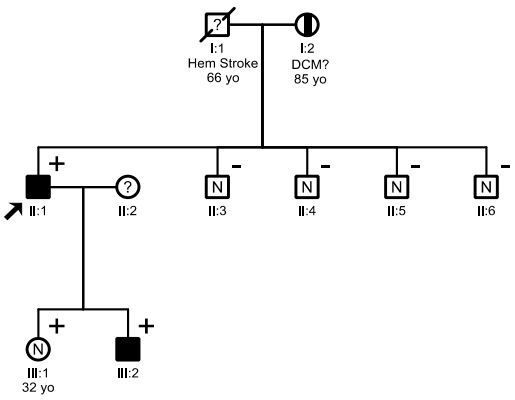

Fam. 29876

c.4127+1delG

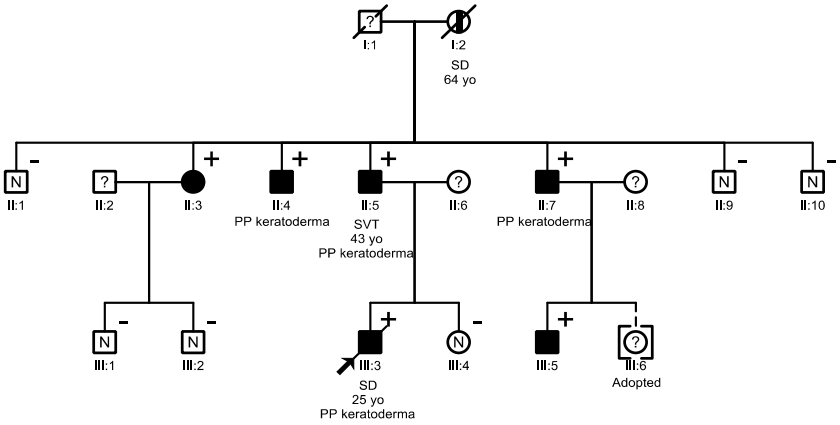

Fam. 33675

Gly1800*

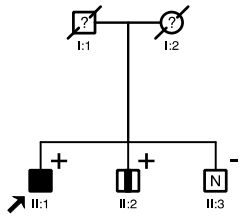

Fam. 36203

Gly1800*

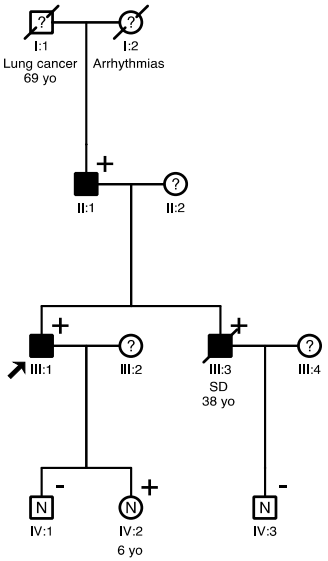

Fam. 33541

c.5539+1G>C

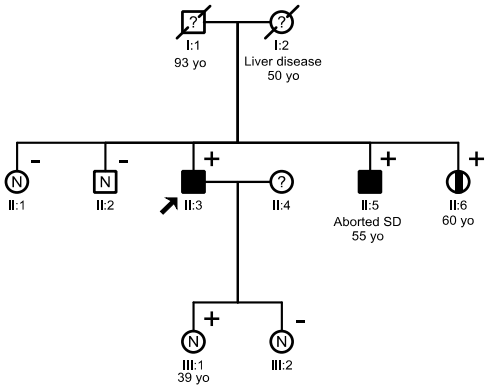

Fam. 37302

Gly2070Ser

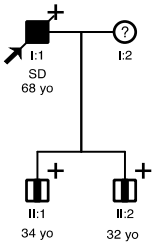

Fam. 25767

Ser2077Argfs*50

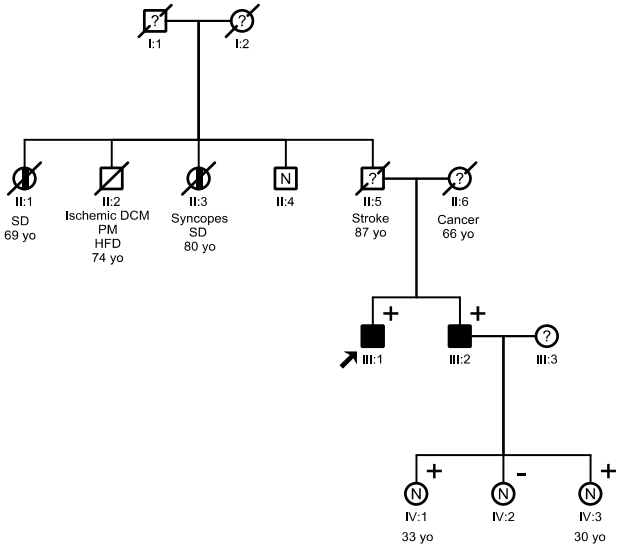

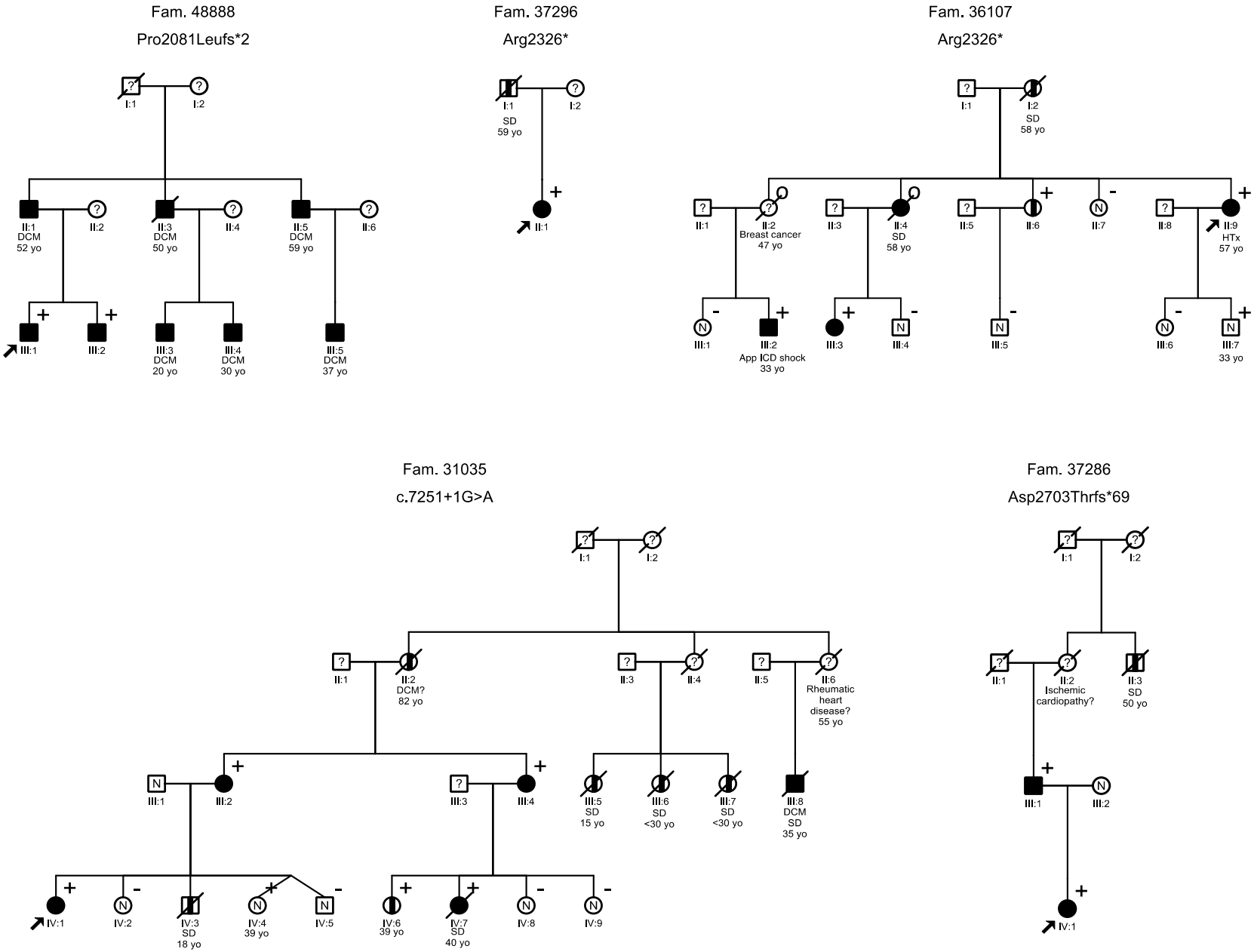

Supplemental Figure 1: Circles, females. Squares, males. Arrows indicate the proband. Clinical status defined by cardiac evaluations or clinical records: black, affected; N, unaffected; vertical bar, possibly affected; slash, deceased; ?, unknown. Genotypes are indicated: +, FLNC mutation present; 0, obligate carrier; -, FLNC mutation absent. Ages below some individuals indicate the age of sudden death (SD), diagnosis of the phenotype (DCM, dilated cardiomyopathy), or last clinical follow-up in healthy carriers. yo= years old. HTx= heart transplant. PP= palmo-plantar keratoderma. SVT= sustained ventricular tachycardia. HFD= heart failure death. PM= pacemaker.

Supplemental Figure 2: Typical ECG findings in affected carriers of FLNC truncating mutations.

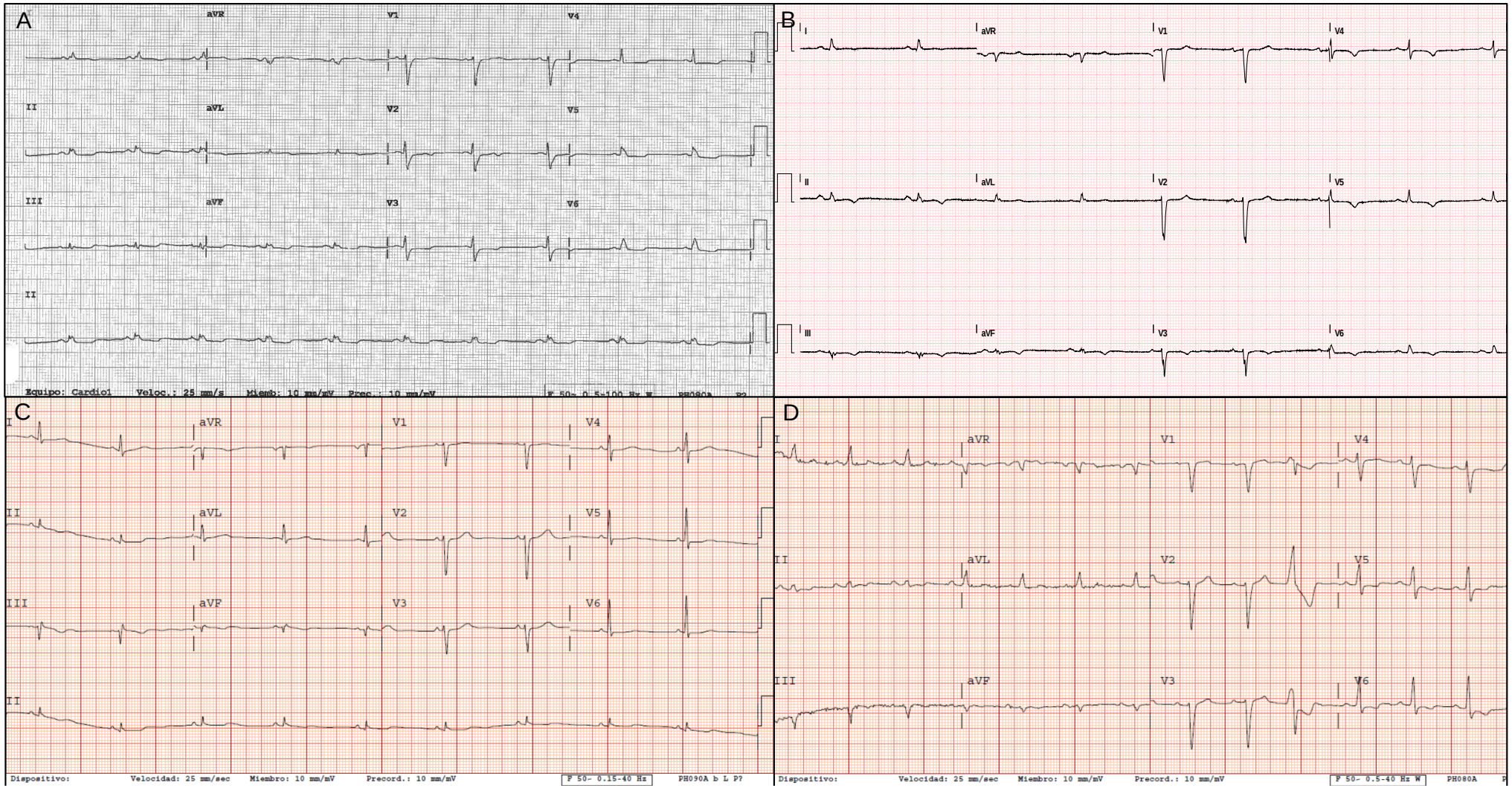

Supplemental Figure 2: ECG from carrier III:2 of family 31035 (Panel A). ECG from carrier II:1 of family 37296 (proband) (Panel B). ECG from carrier III:1 (proband) of family 36203 (Panel C). ECG from carrier II:6 of family 36107 (Panel D).

Supplemental Figure 3: Palmo-plantar keratoderma in carrier II:6 from family 29876.

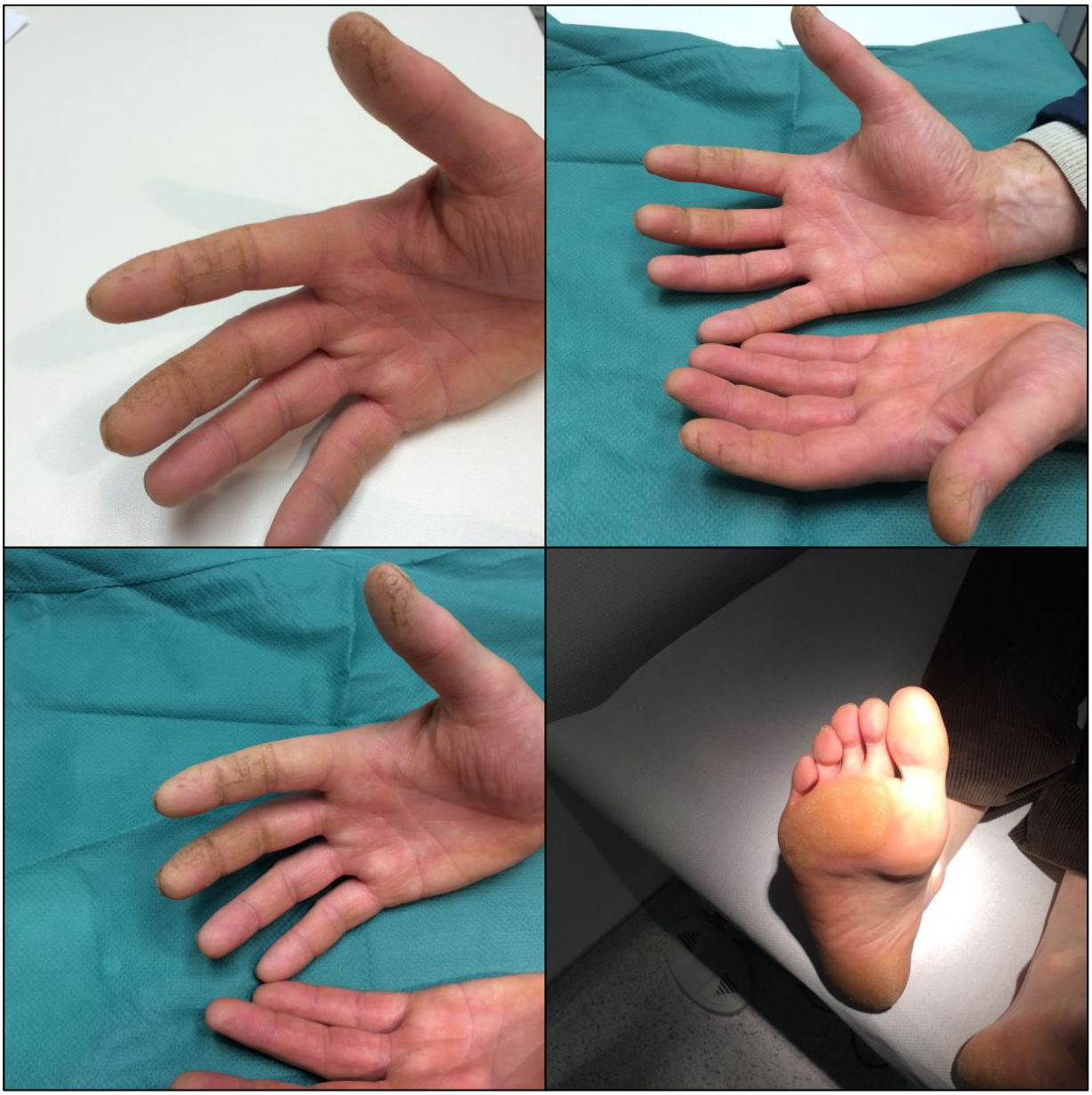

Supplemental Figure 4: Appropriate defibrillator shock in a patient with a FLNC truncating mutation.

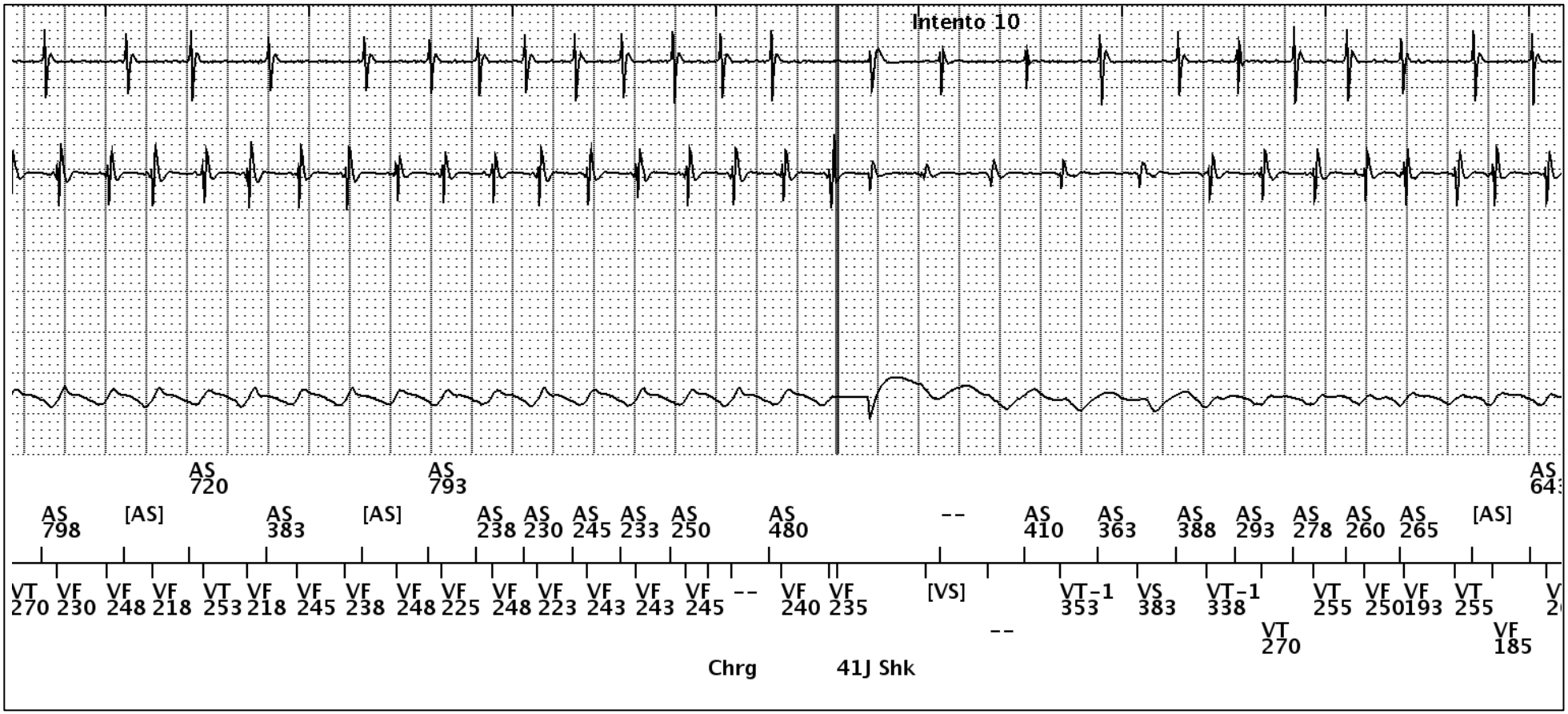

Supplemental Figure 4: Proband III:3 of family 29876. Presented with syncope due to sustained ventricular tachycardia while playing soccer. A cardiac defibrillator was implanted as secondary prevention. Died during a ventricular arrhythmic storm a few days later. Picture shows 10/12 failed appropriate defibrillator shock.